CHAPTER 4 (C)

SCHEMATIC AND FUNCTIONAL DIAGRAMS

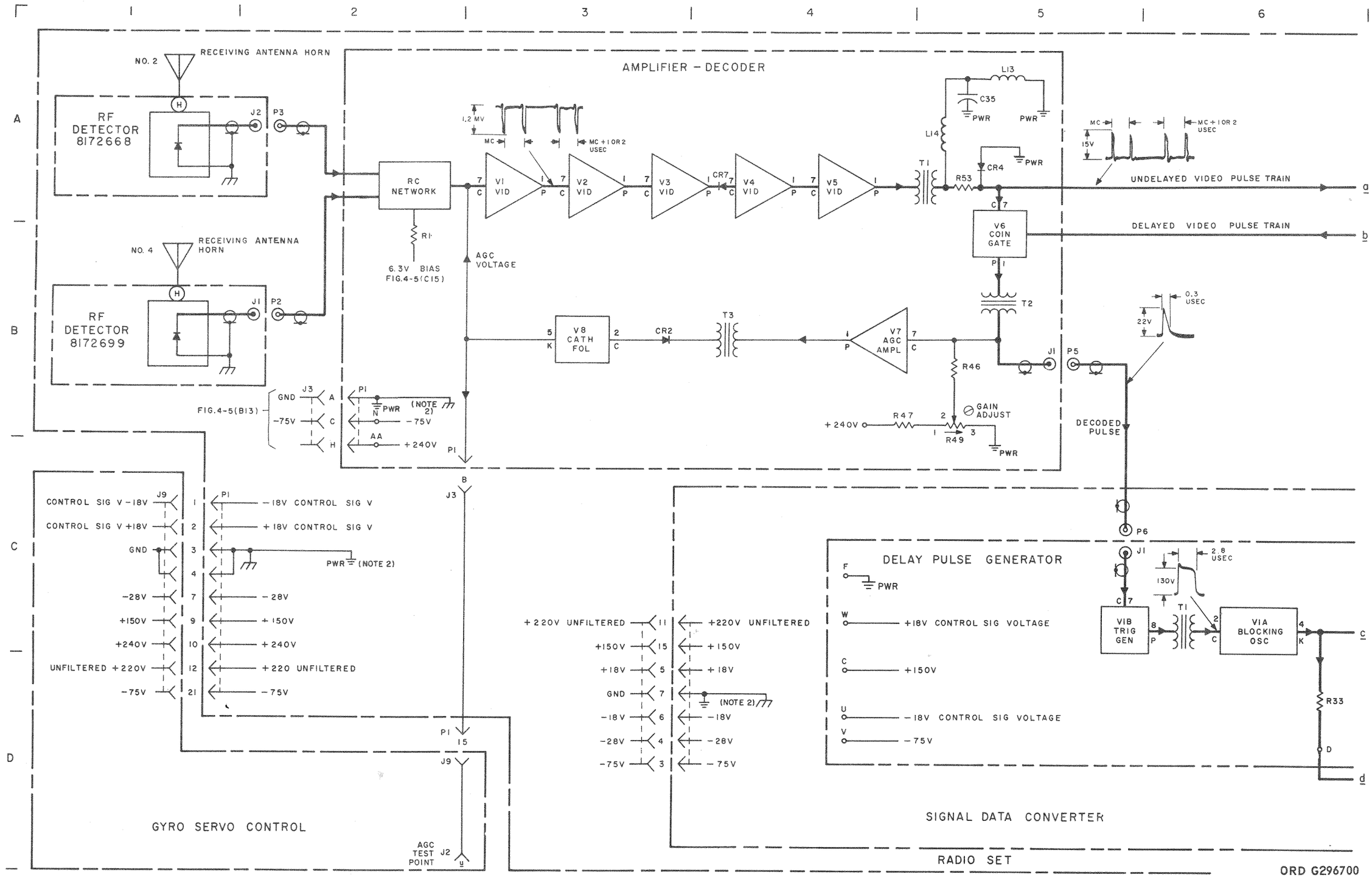

Figure 4-1 (C). Receiving and decoding circuit—functional schematic (stovepipe) (sheet 1 of 3) (U).

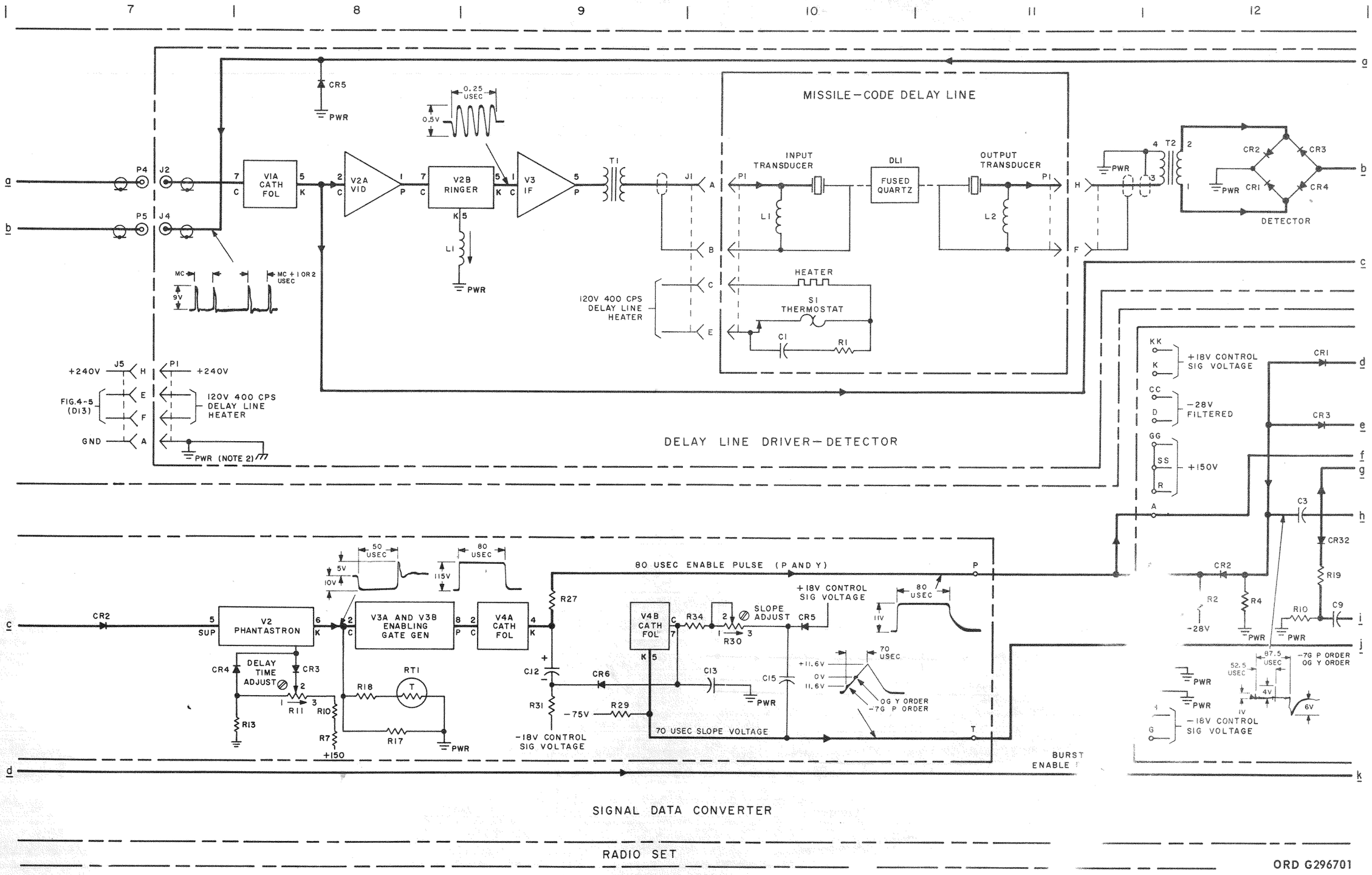

Figure 4-1 (C). Receiving and decoding circuit—functional schematic (stovepipe) (sheet 2 of 3) (U).

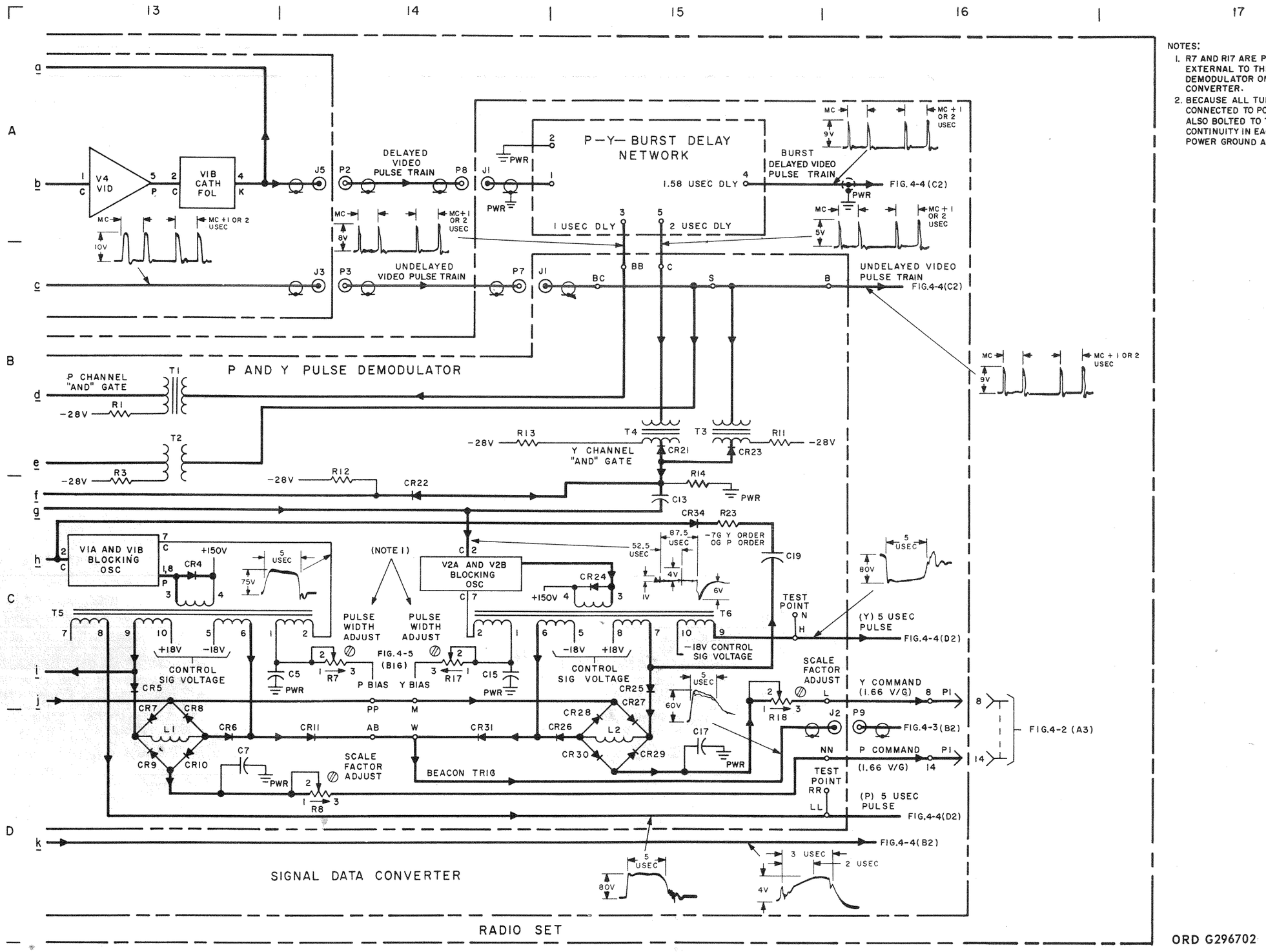

NOTES:

1. R7 AND R17 ARE PHYSICALLY LOCATED EXTERNAL TO THE P AND Y PULSE DEMODULATOR ON THF SIGNAL DATA CONVERTER.
2. BECAUSE ALL TUBE HOLDERS ARE CONNECTED TO POWER GROUND AND ARE ALSO BOLTED TO THE FRAME, THERE IS CONTINUITY IN EACH UNIT BETWEEN POWER GROUND AND FRAME GROUND.

ORD G296702

Figure 4-1 (C). Receiving and decoding circuit—functional schematic (stovepipe) (sheet 3 of 3) (U).

517-641 O - 73 - 9

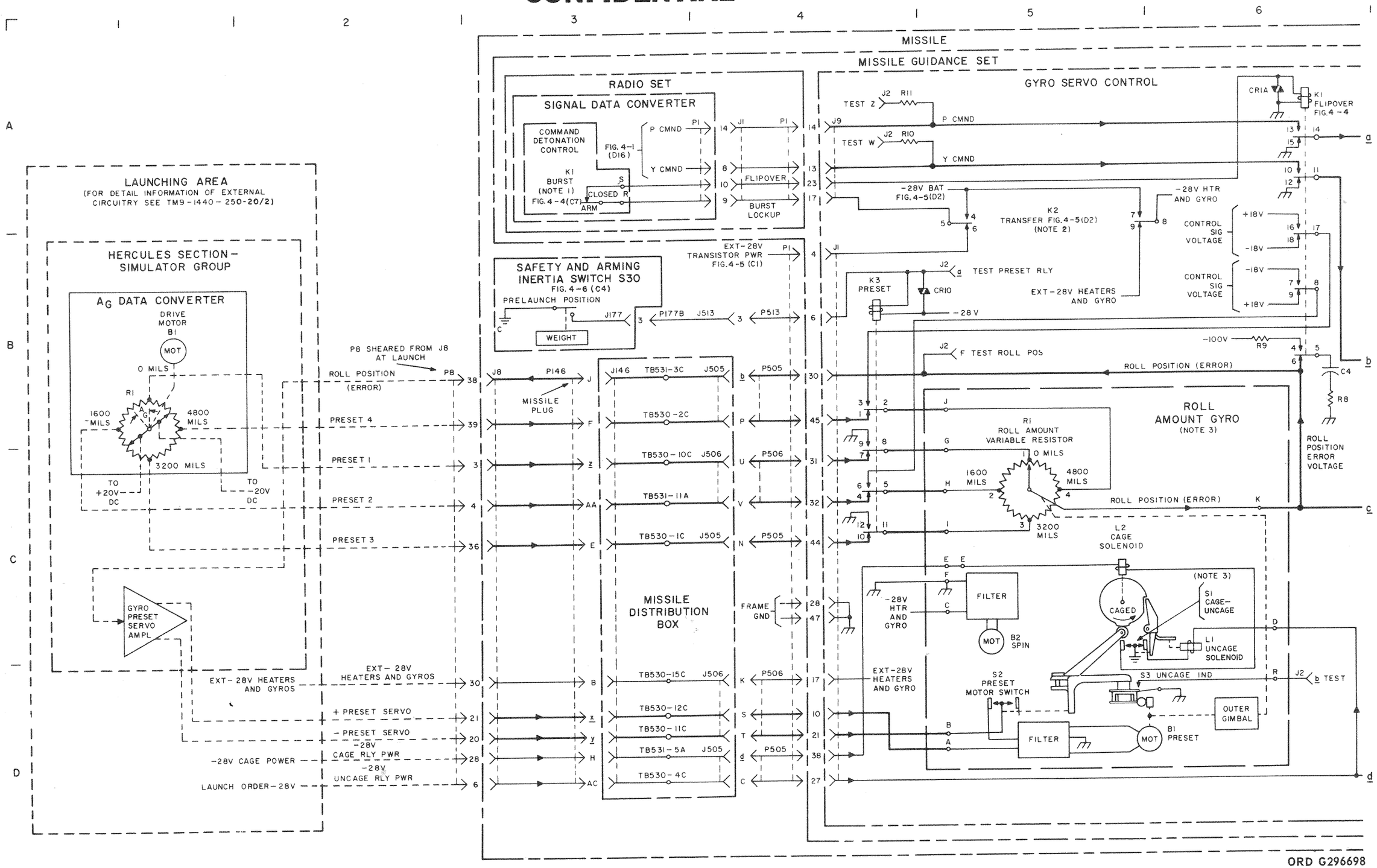

Figure 4-2 (C). Steering control circuit—functional diagram (stovepipe) (sheet 1 of 3) (U).

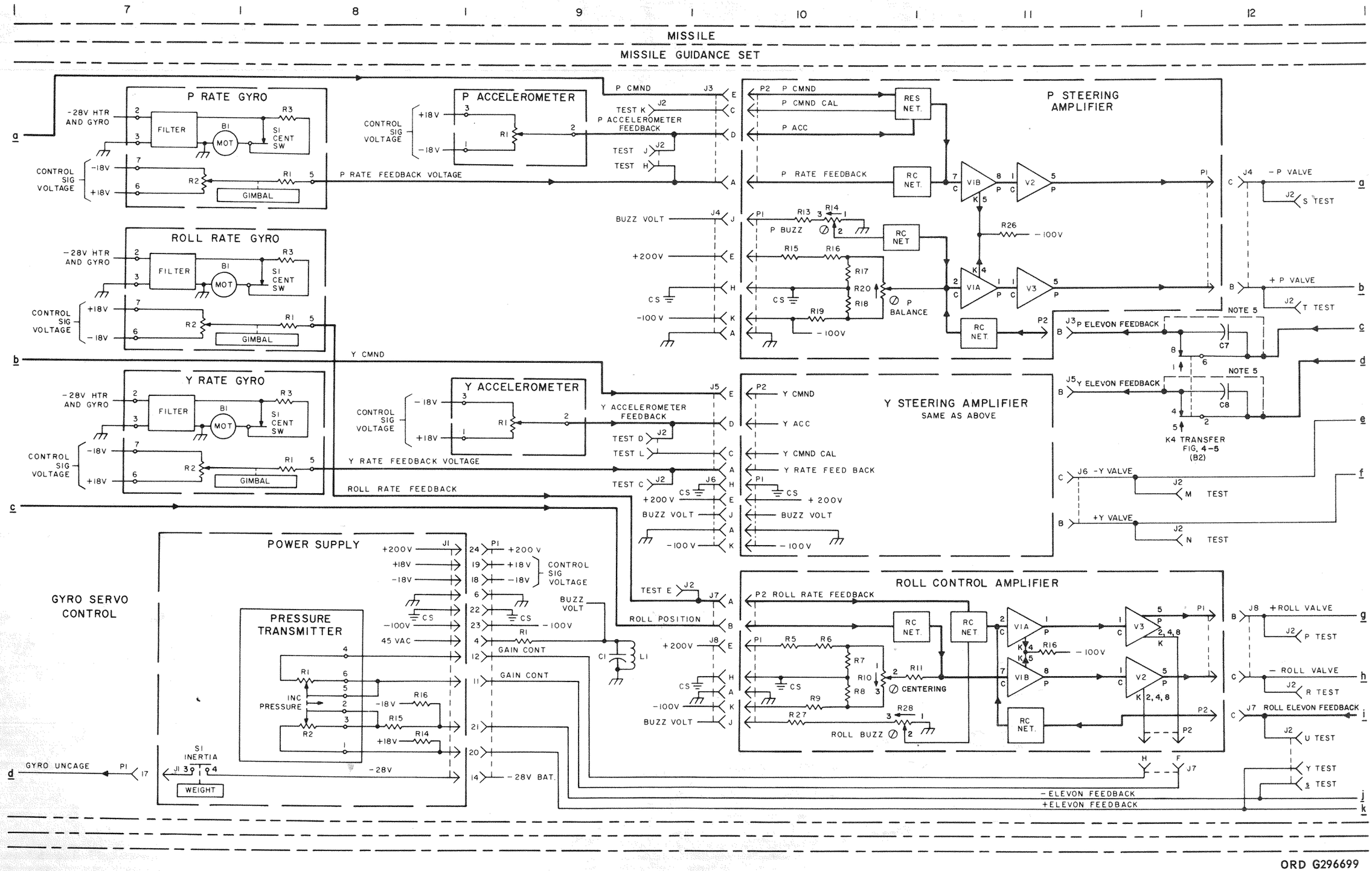

Figure 4-2 (C). Steering control circuit—functional diagram (stovepipe) (sheet 2 of 3) (U).

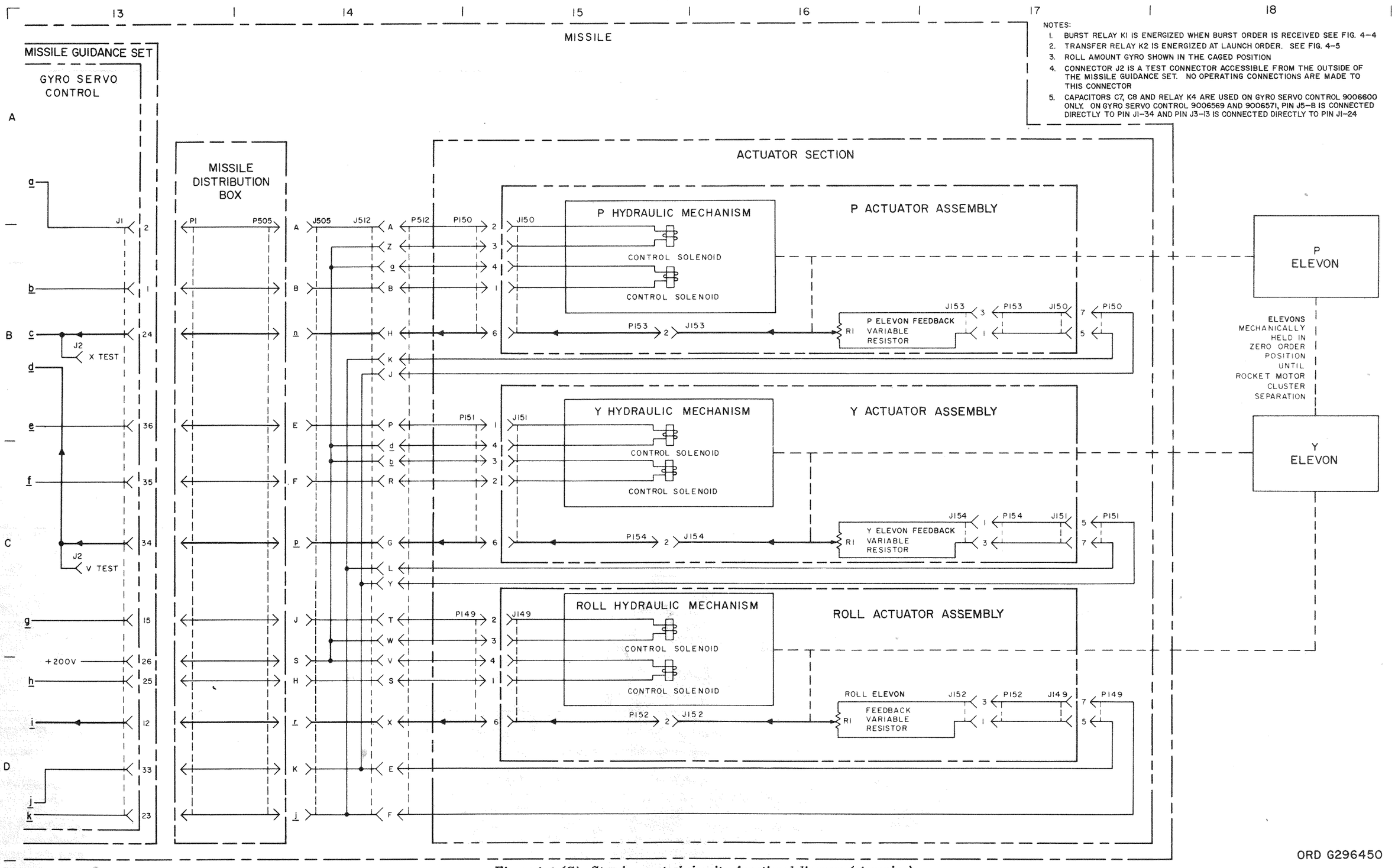

Figure 4-2 (C). Steering control circuit—functional diagram (stovepipe) (sheet 3 of 3) (U).

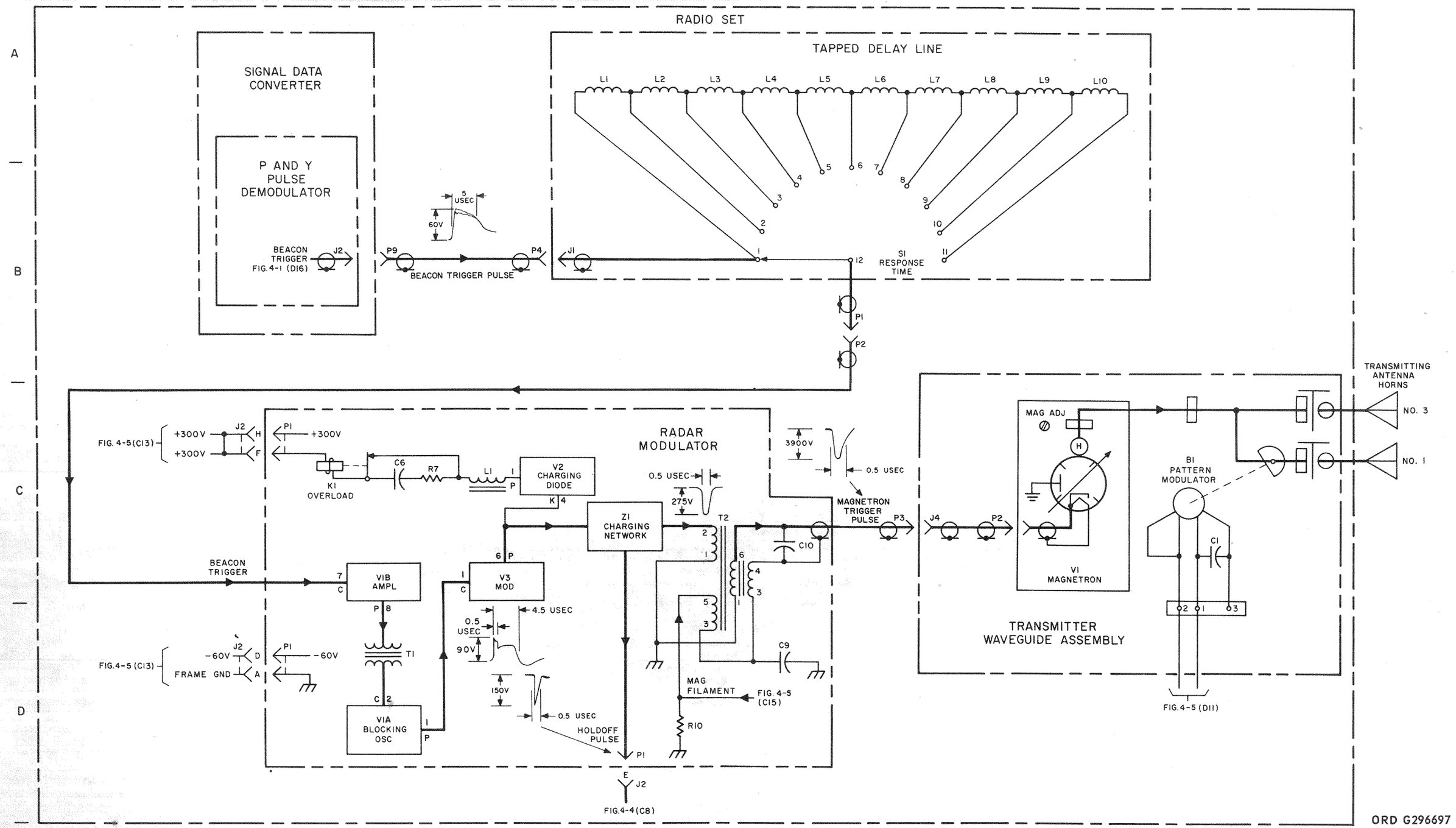

Figure 4-3 (C). Beacon transmitting circuit—functional diagram (stovepipe) (U).

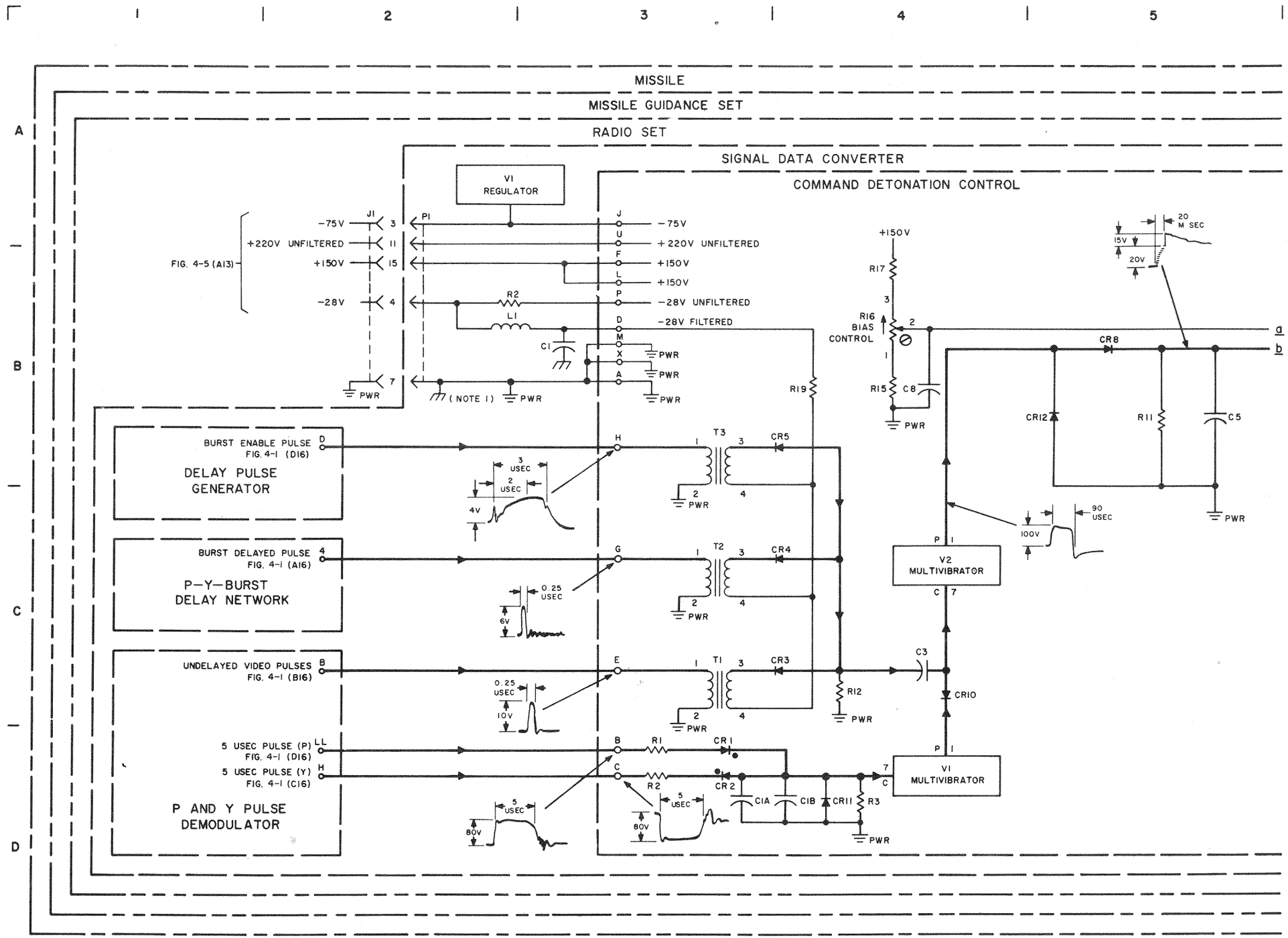

Figure 4-4 (C). Detonation command circuit—functional diagram (stovepipe) (sheet 1 of 3) (U).

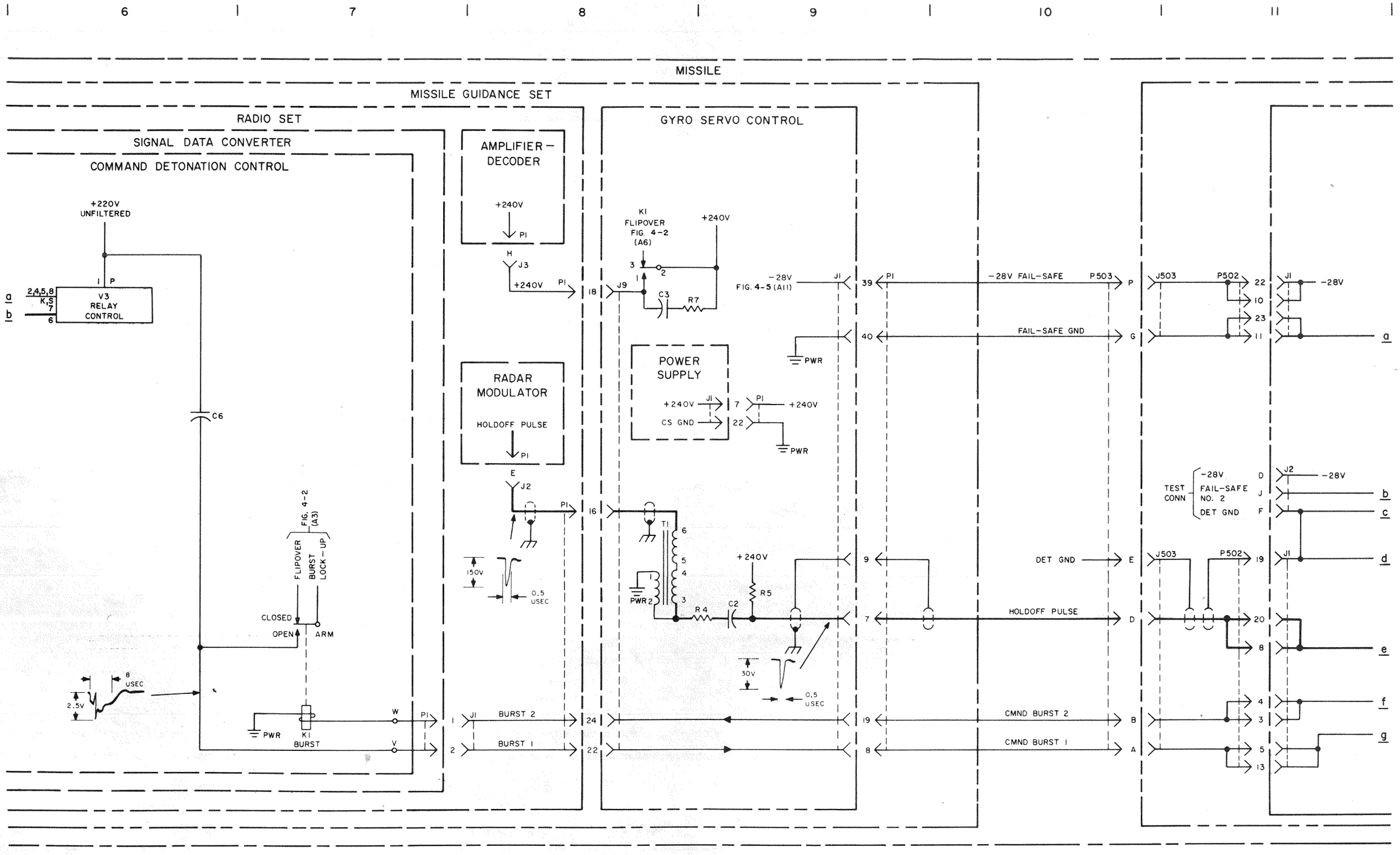

ORD G296696

Figure 4-4 (C). Detonation command circuit—functional diagram (stovepipe) (sheet 2 of 3) (U).

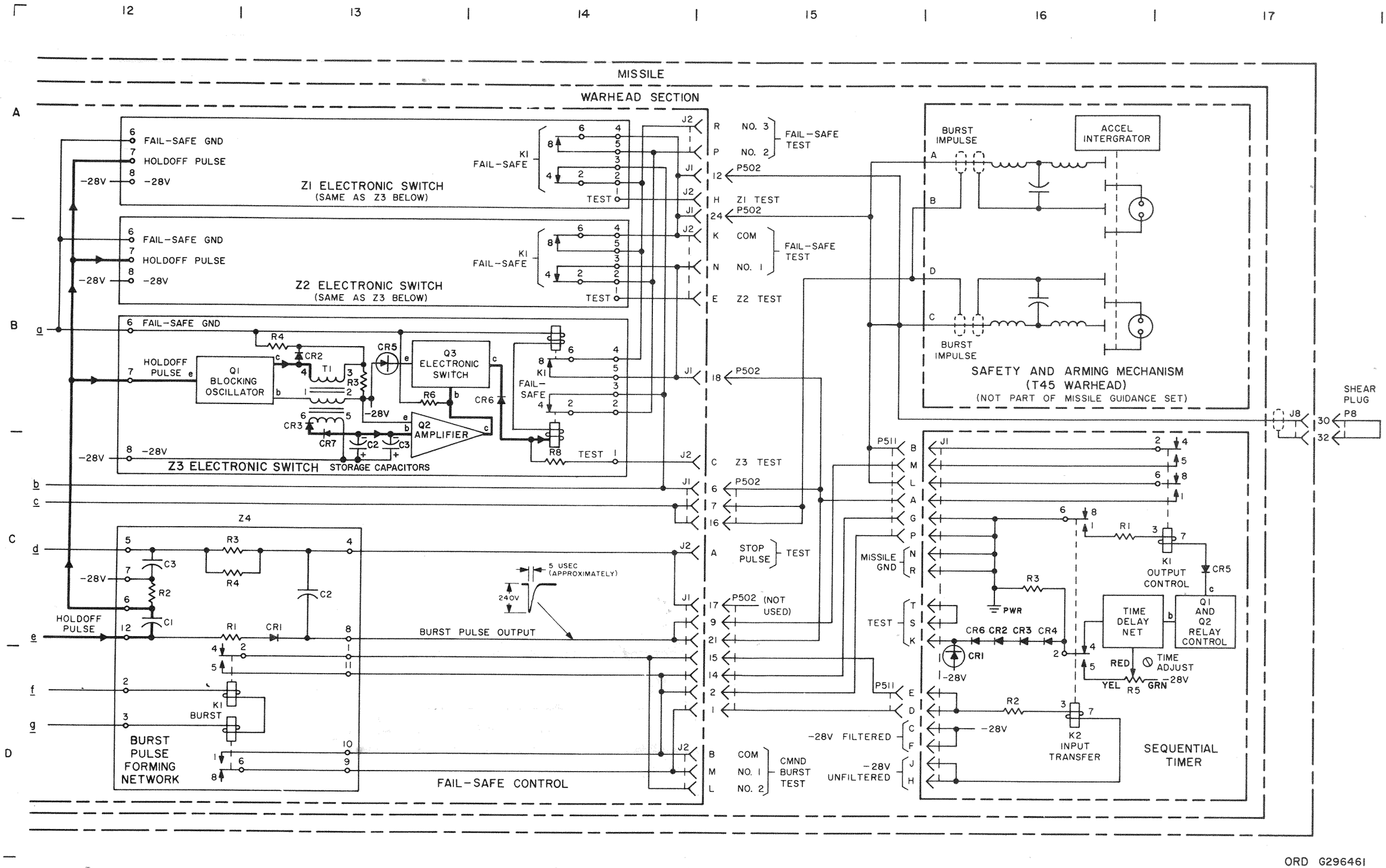

ORD G296461

Figure 4-4 (C). Detonation command circuit—functional diagram (stovepipe) (sheet 3 of 3) (U).

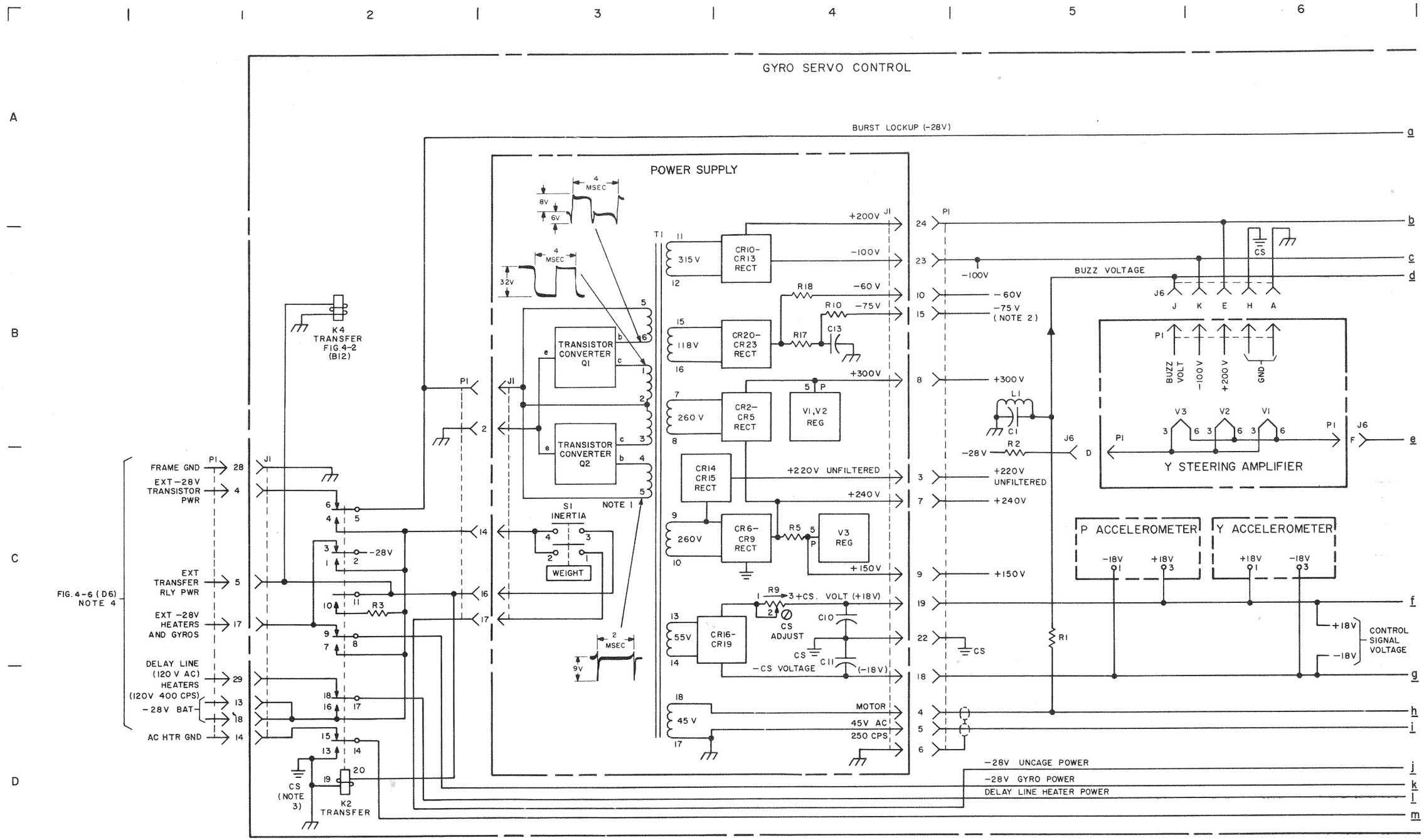

ORD G296693

Figure 4-5 (U). Power supply and distribution circuit—functional diagram (stovepipe) (sheet 1 of 3) (U).

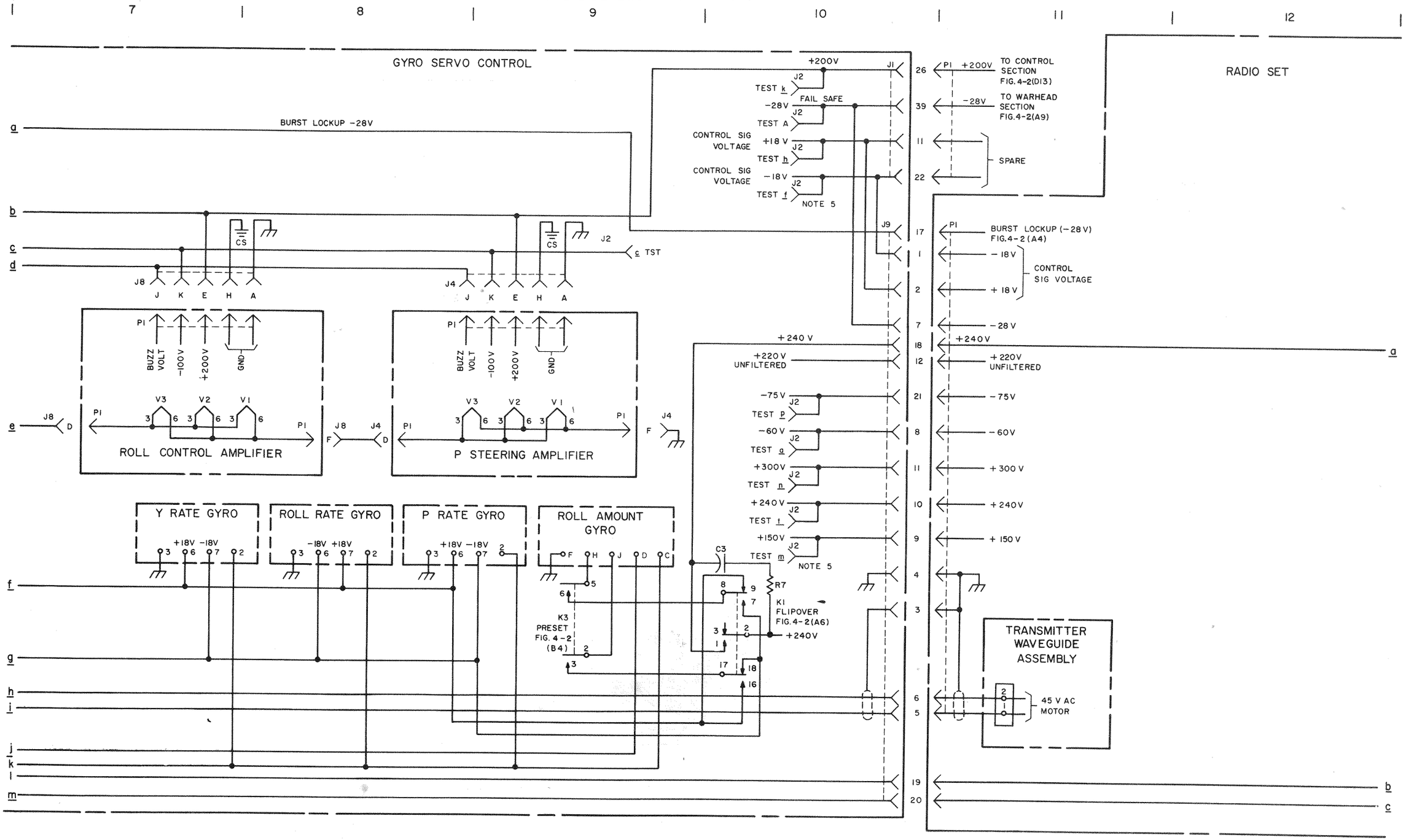

ORD G296694

Figure 4-5 (U). Power supply and distribution circuit—functional diagram (stovepipe) (sheet 2 of 3) (U).

517-641 O - 73 - 10

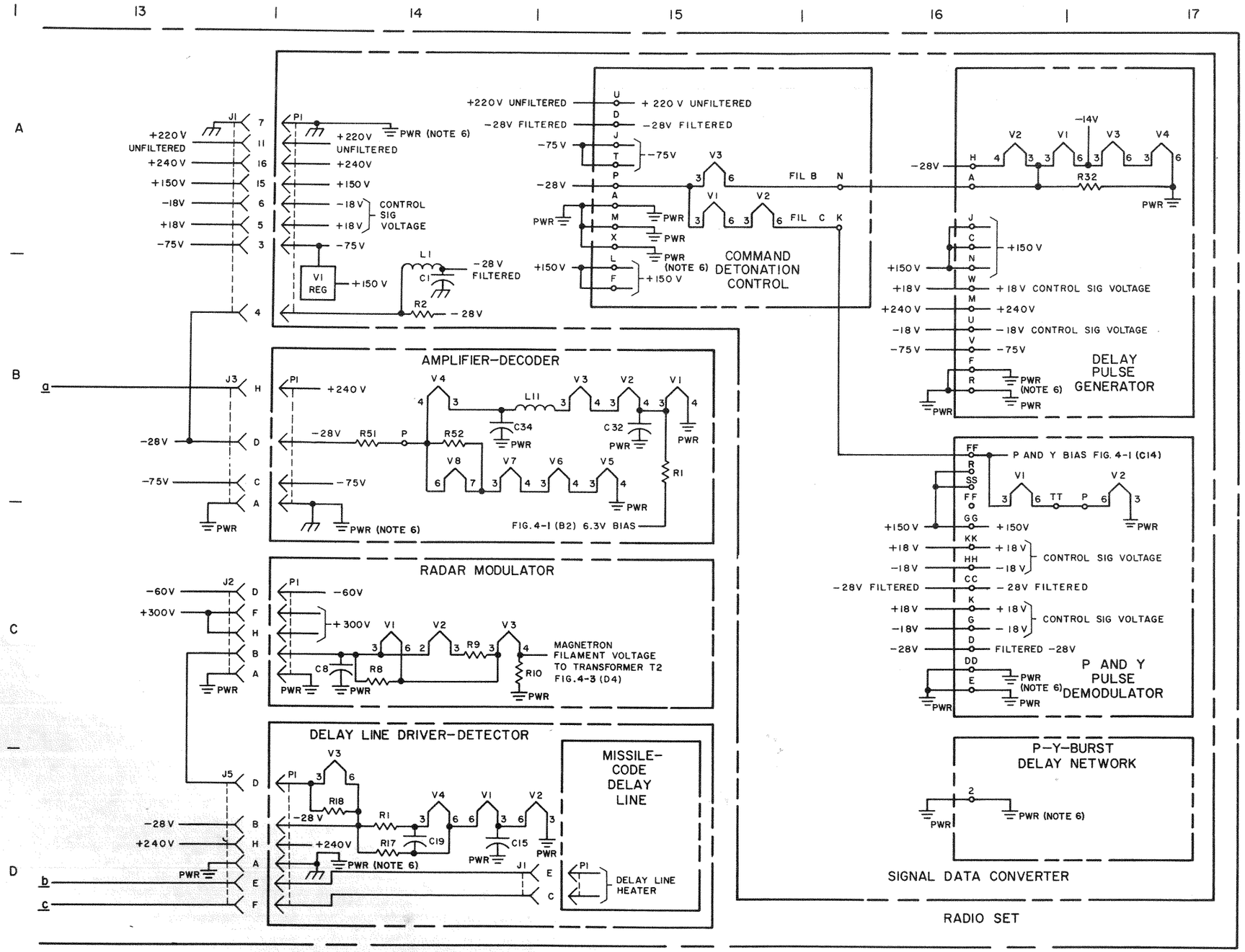

NOTES:

1. THESE ARE PART OF CENTER TAPPED WINDING 4-5-6
2. -75V OUTPUT FROM THE POWER SUPPLY IS REGULATED BY VOLTAGE REGULATOR V1, LOCATED IN THE SIGNAL DATA CONVERTER
3. CS AND FRAME GND CONNECTED ONLY AT THIS POINT
4. CONNECTOR J1 OF GYRO SERVO CONTROL IS ALSO J1 OF MISSILE GUIDANCE SET FIGURE 4-6 (D6)
5. CONNECTOR J2 IS A TEST CONNECTOR ACCESSIBLE FROM THE OUTSIDE OF THE GYRO SERVO CONTROL. NO OPERATING CONNECTIONS ARE MADE TO THIS CONNECTOR
6. BECAUSE ALL TUBE HOLDERS ARE CONNECTED TO POWER GROUND AND ARE ALSO BOLTED TO THE FRAME THERE IS CONTINUITY BETWEEN POWER GROUND AND FRAME GROUND

ORD G296695

Figure 4-5 (U). Power supply and distribution circuit—functional diagram (stovepipe) (sheet 3 of 3) (U).

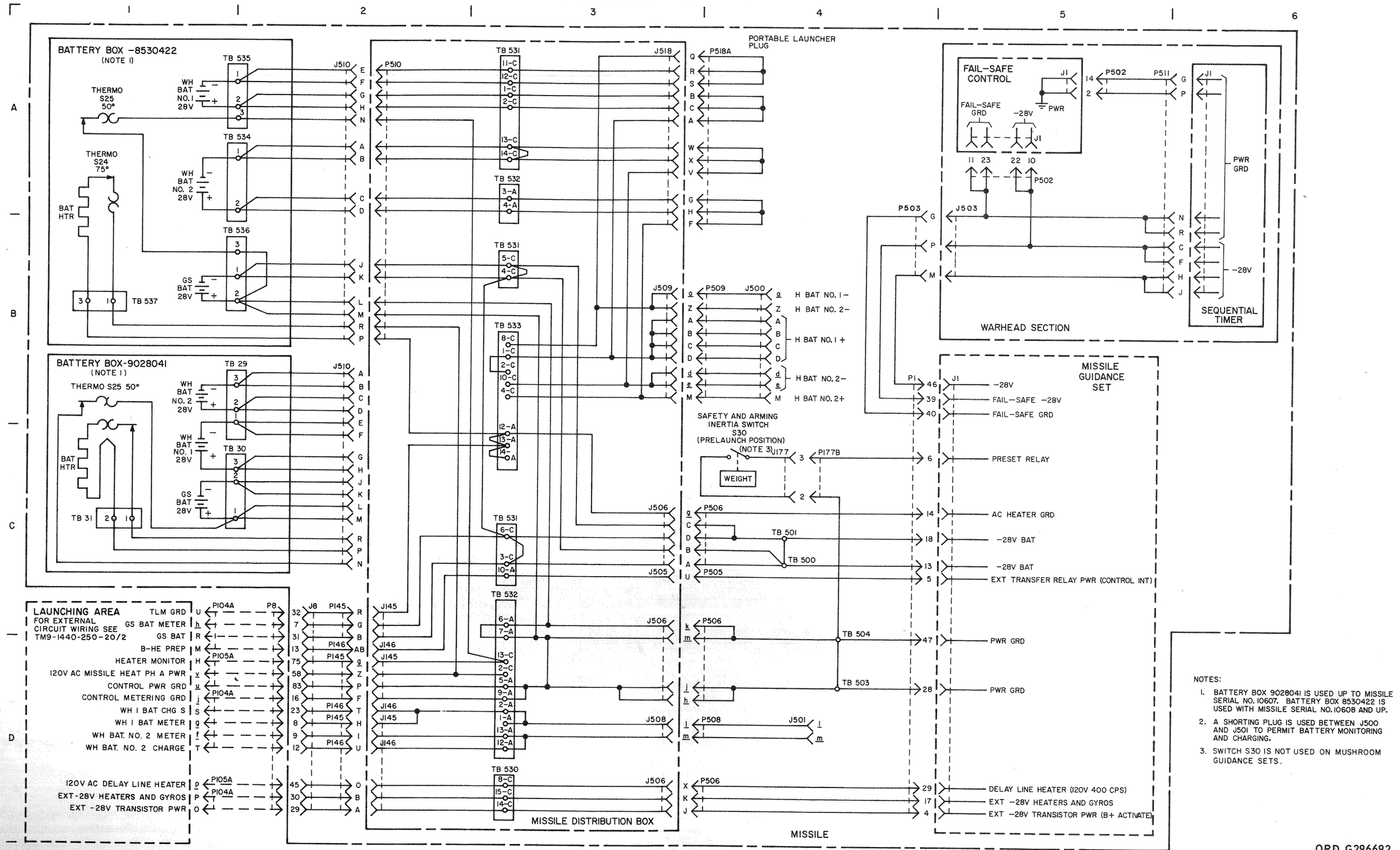

Figure 4-6 (U). -28 volt and ground distribution circuit—functional diagram (U).

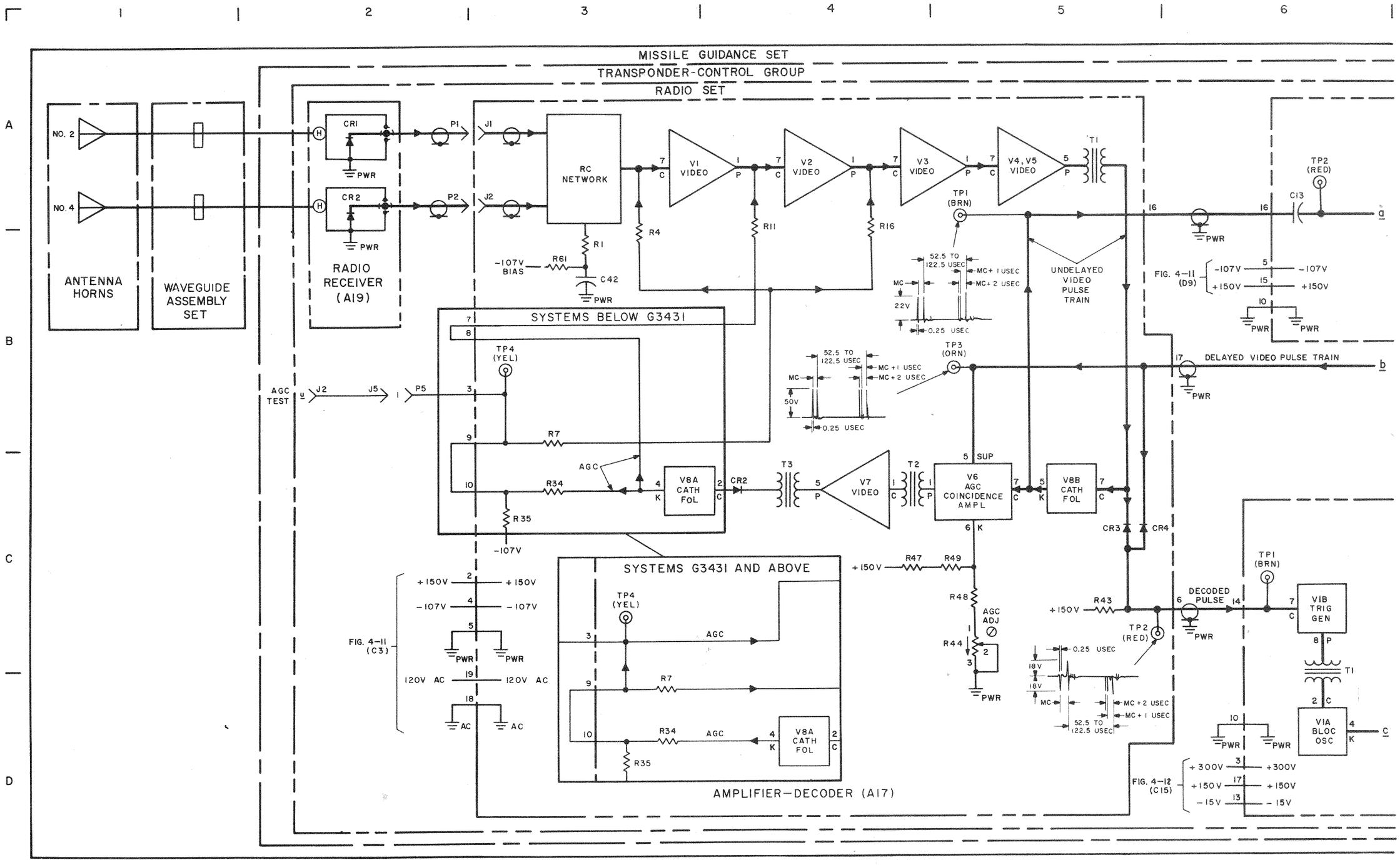

Figure 4-7 (C). Receiving and decoding circuit—functional diagram (mushroom) (sheet 1 of 4) (U).

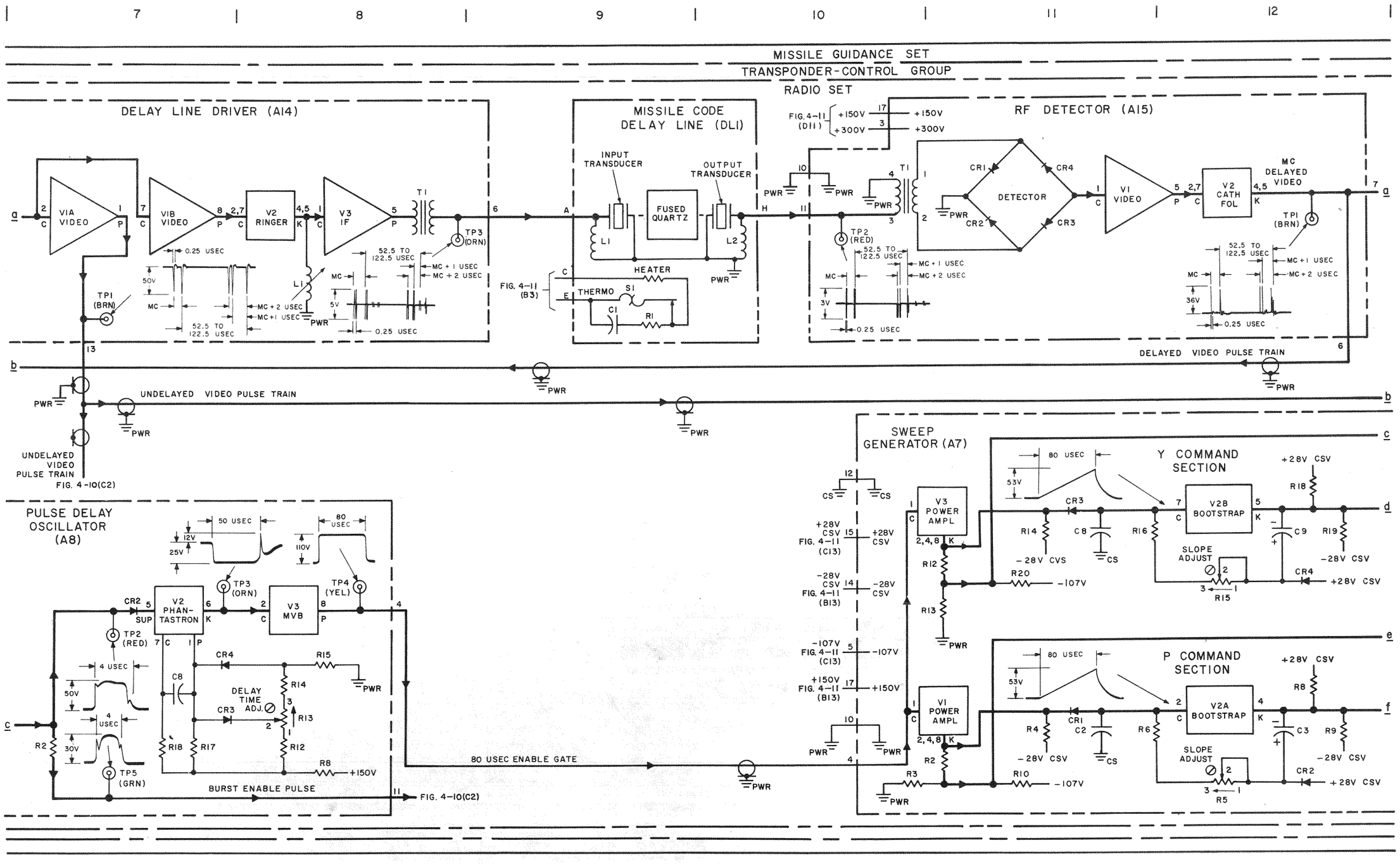

ORD G296689

Figure 4-7 (C). Receiving and decoding circuit—functional diagram (mushroom) (sheet 2 of 4) (U).

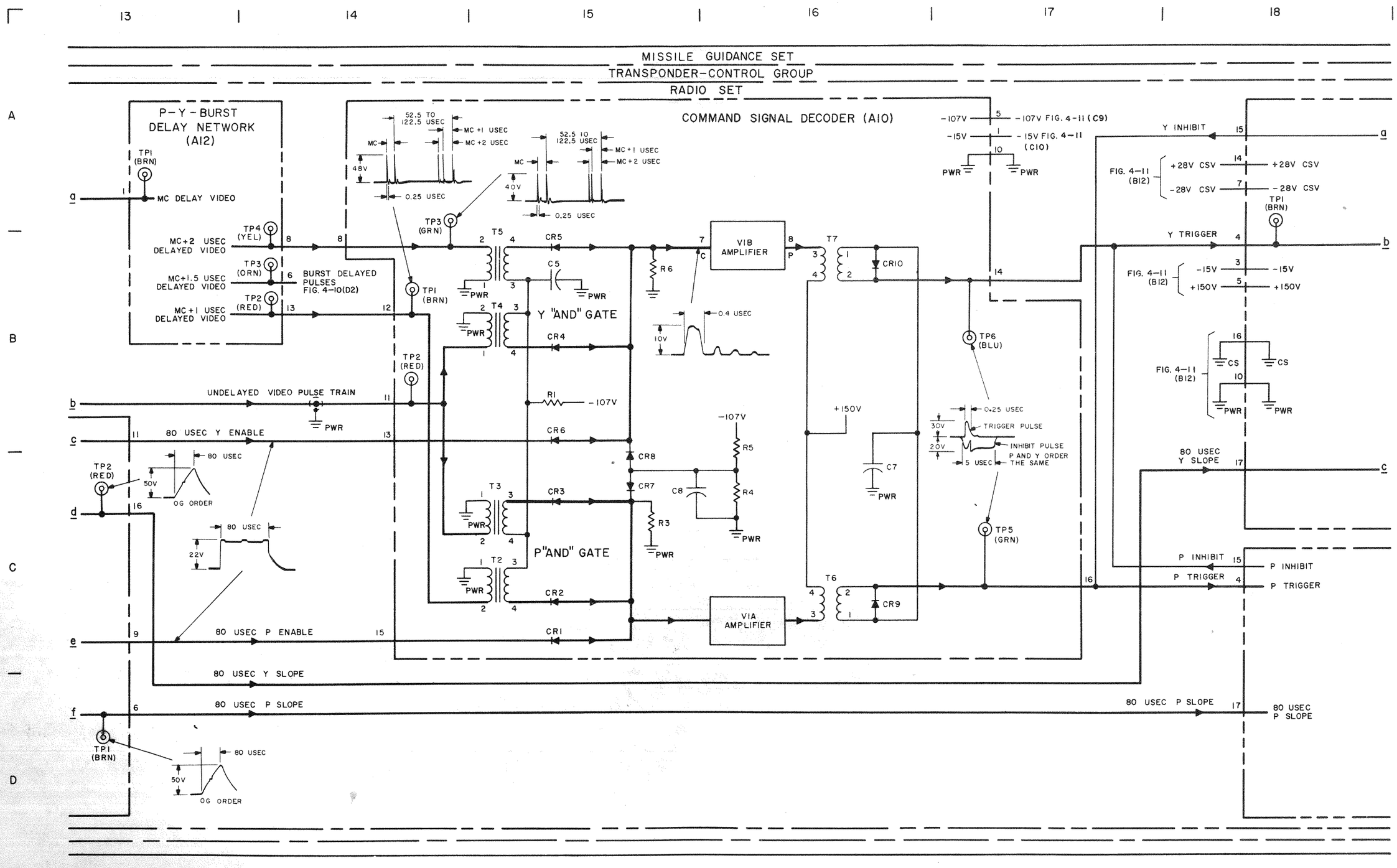

ORD G296690

Figure 4-7 (C). Receiving and decoding circuit—functional diagram (mushroom) (sheet 3 of 4) (U).

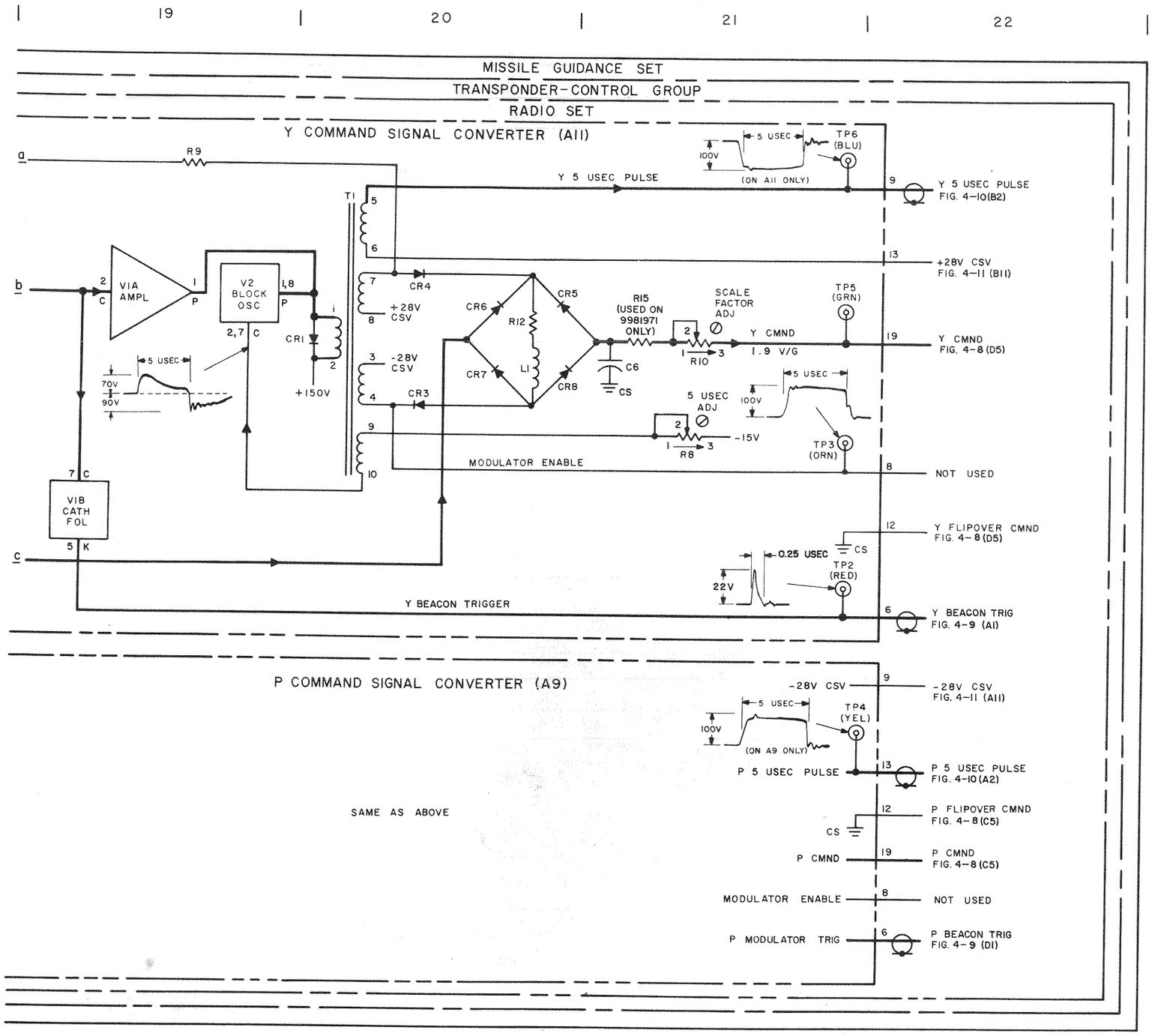

ORD G296691A

Figure 4-7 (C). Receiving and decoding circuit—functional diagram (mushroom) (sheet 4 of 4) (U).

CONFIDENTIAL

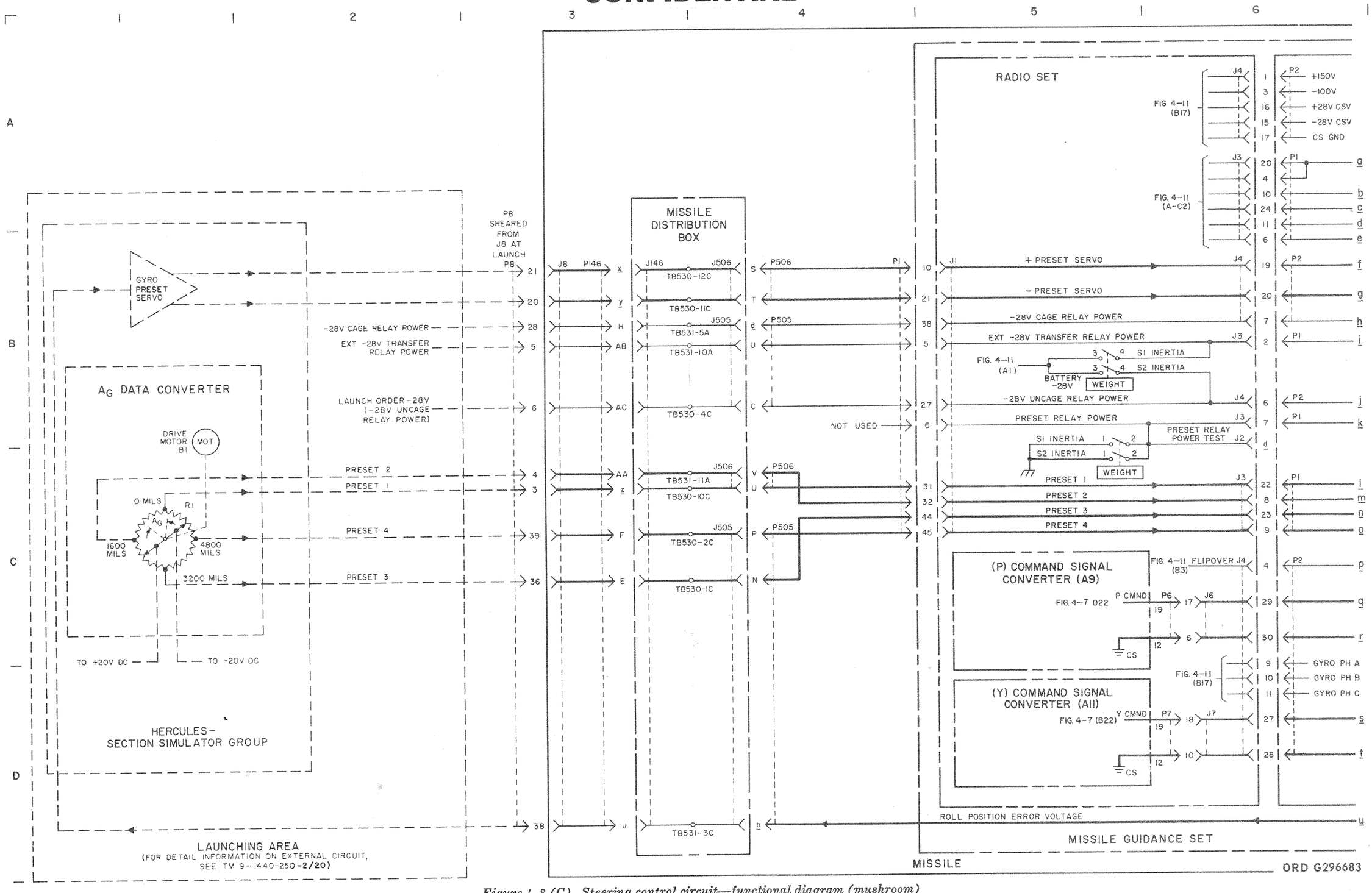

Figure 4-8 (C). Steering control circuit—functional diagram (mushroom) (sheet 1 of 5) (U).

CONFIDENTIAL

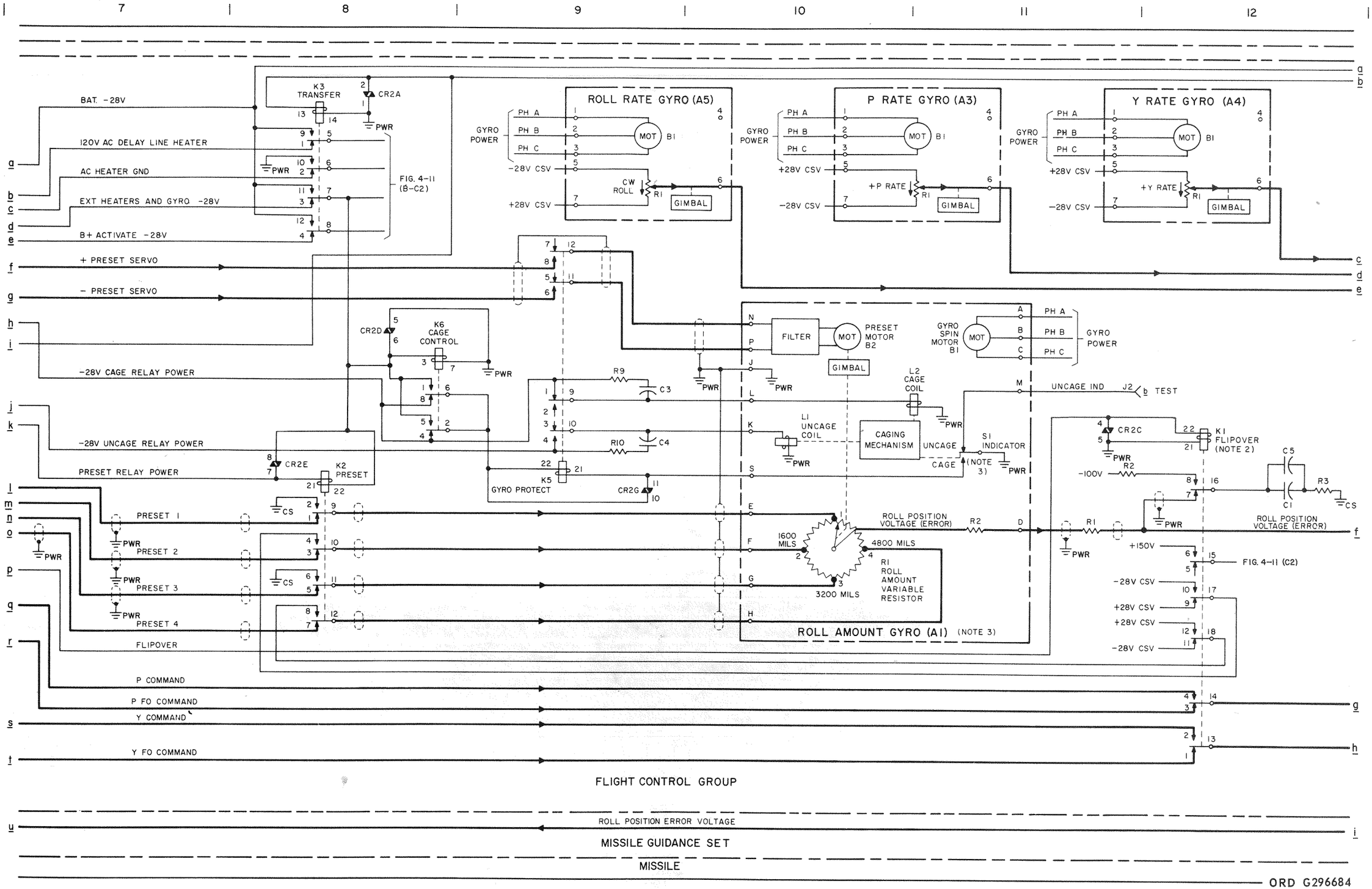

Figure 4-8 (C). Steering control circuit—functional diagram (mushroom) (sheet 2 of 5) (U).

517-641 O - 73 - 11

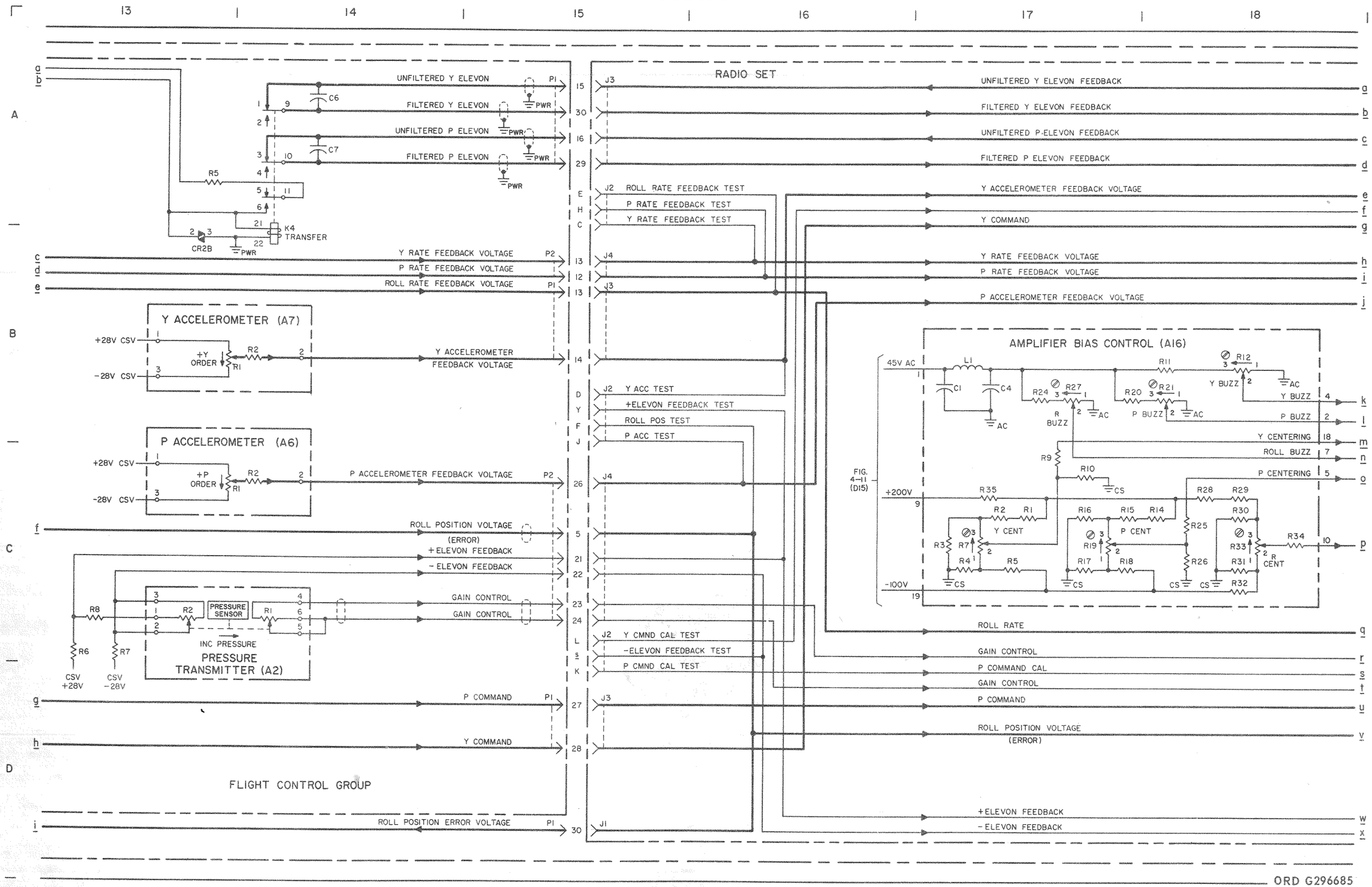

Figure 4-8 (C). Steering control circuit—functional diagram (mushroom) (sheet 3 of 5) (U).

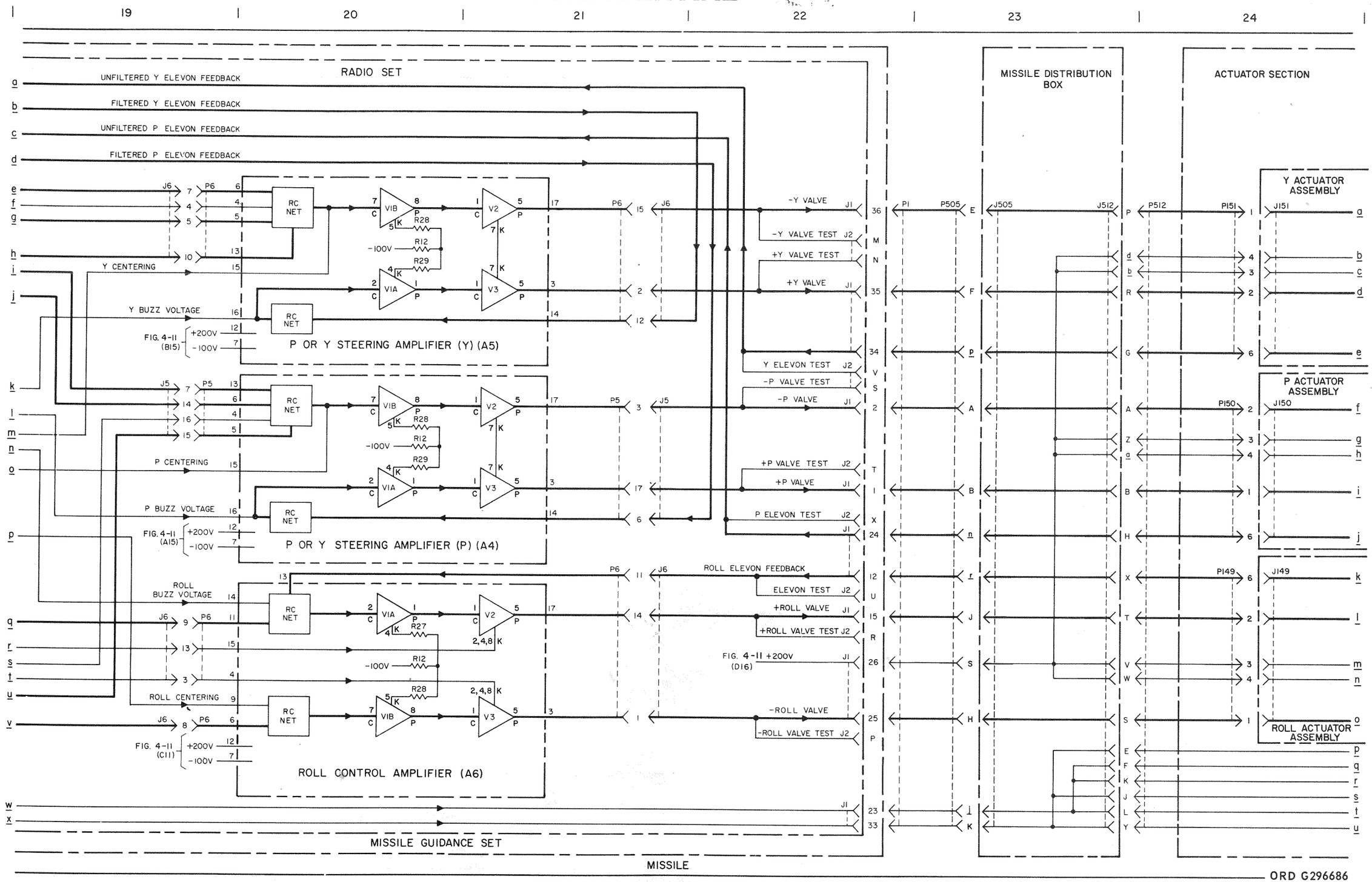

Figure 4-8 (C). Steering control circuit—functional diagram (mushroom) (sheet 4 of 5) (U).

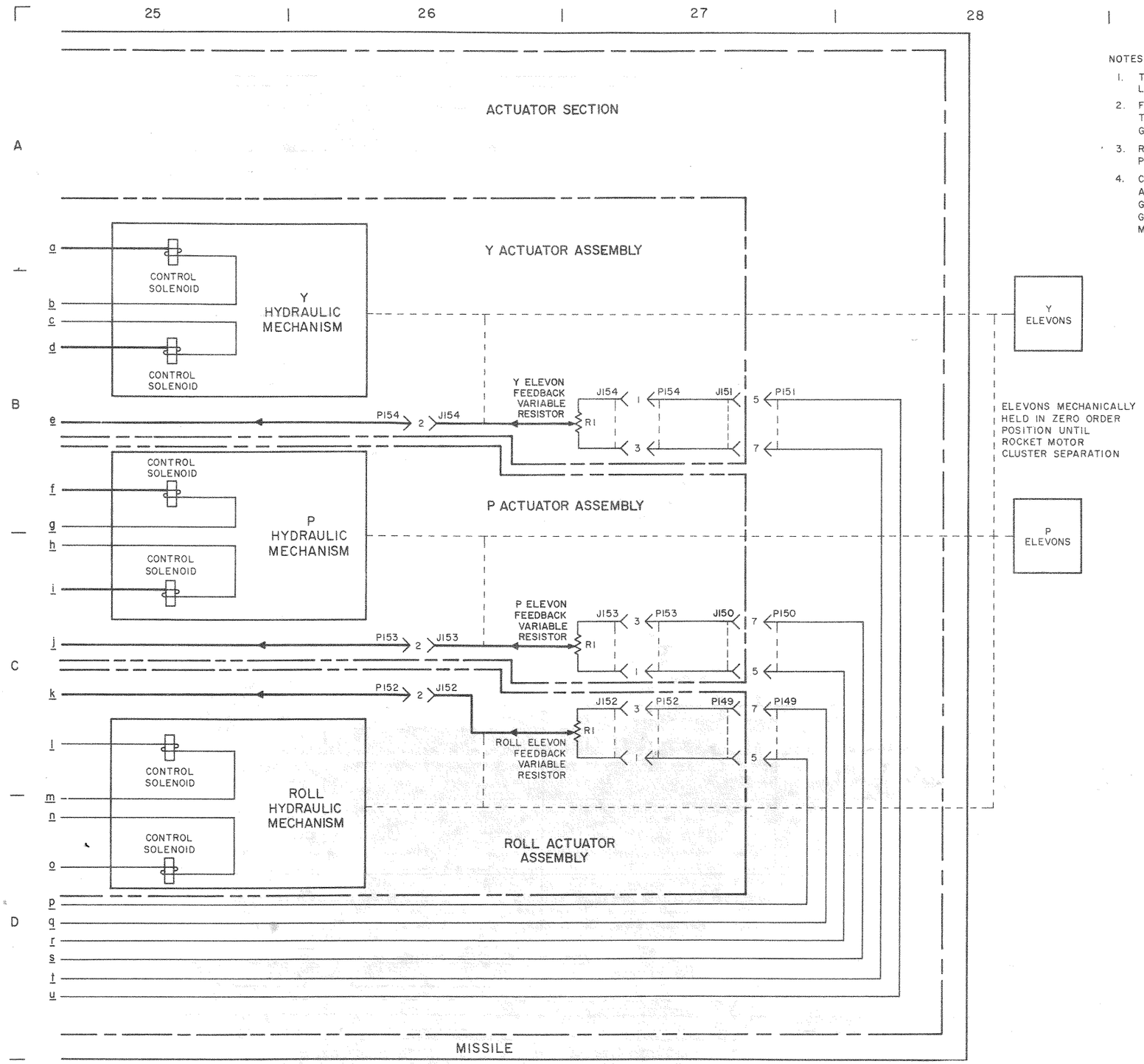

NOTES:

1. TRANSFER RELAY K3 OPERATES AT LAUNCH, FIG. 4-11 (A2)
2. FLIPOVER RELAY K1 OPERATES WHEN THE BURST SIGNAL IS RECEIVED FROM GROUND GUIDANCE, FIG. 4-10(B7)
3. ROLL AMOUNT GYRO SHOWN IN UNCAGED POSITION
4. CONNECTOR J2 IS A TEST CONNECTOR ACCESSIBLE FROM THE OUTSIDE OF THE GUIDANCE SET (TRANSPONDER CONTROL GROUP). NO OPERATING CONNECTIONS ARE MADE TO THIS CONNECTOR

ORD G296687

Figure 4-8 (C). Steering control circuit—functional diagram (mushroom) (sheet 5 of 5) (U).